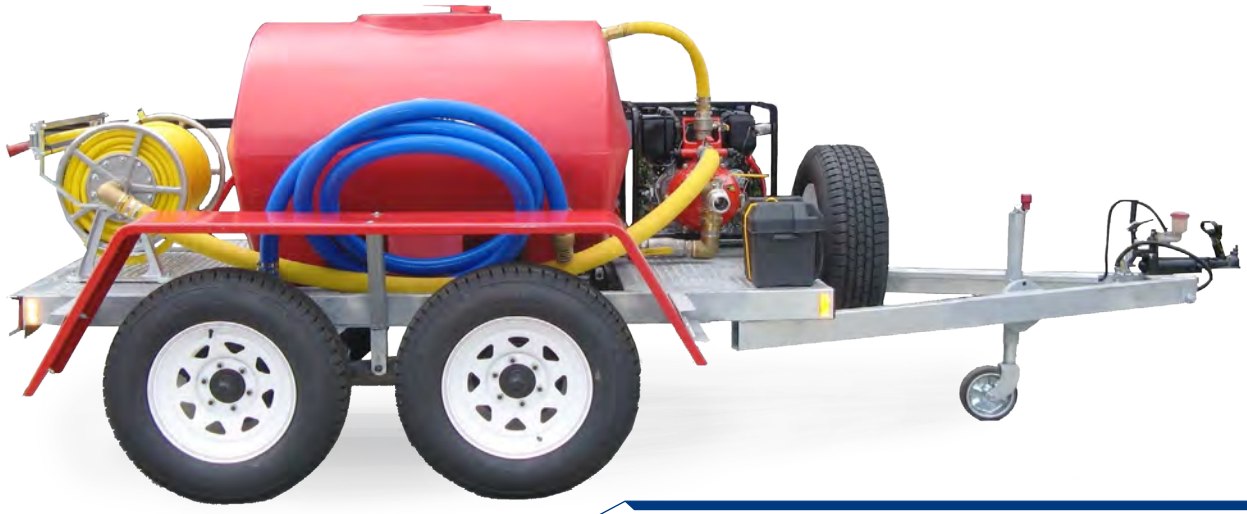

TRAILER MOUNTED SYSTEMS

The **ALLIED PUMPS** Trailer Mounted System is purpose built mobile fire fighting unit. It is designed and manufactured for easy operation and smooth towing. The durable water tank is manufactured with a specialized grade polyethylene formulated for use in diesel tanks and is UV stabilised for long life.

Fire Mounted Systems are available in a large range of sizes and can be customized to suit your needs.

KEY FEATURES

- Extra heavy duty galvanised chassis frame
- Large range of sizes available
- Durable UV stabilised polyethylene baffled tank
- Reliable engine
- Hydraulic brake system
- 6 metre suction hose with non-return foot valve

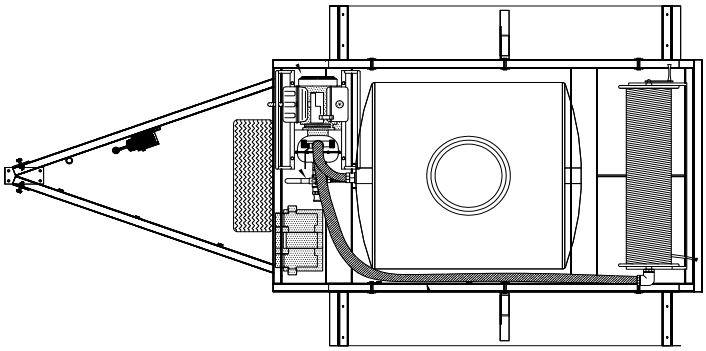

APPLICATIONS

- Small airports
- Remote camps
- Temporary installations
- Site offices
- Gate houses/ablution blocks

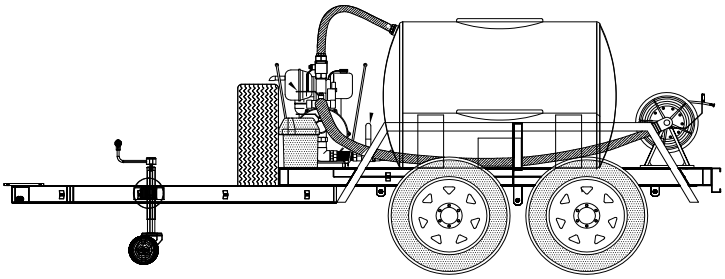

OPTIONS AVAILABLE

- Poly tool storage box
- Diesel transfer pump kits
- Indicator lamp kit
- Additional delivery hose reel

HEAD OFFICE
2 Modal Crescent (Cnr Baile Rd)
Canning Vale WA 6155

PO Box 1468
Canning Vale DC WA 6970

(t) +61 (0) 8 9350 1000
(f) +61 (0) 8 9356 5255
(e) info@alliedpumps.com.au

SOUTH WEST
115 Stead Road
Centennial Park WA 6330

(t) +61 (0) 8 9350 1000

KALGOORLIE
46 Great Eastern Highway
Kalgoorlie WA 6430

(t) 1800 335 550

DARWIN
PO Box 506
Darwin NT 0801

(t) 1800 335 550

SALES ENQUIRIES
Free call 1800 335 550

(e) sales@alliedpumps.com.au

TECHNICAL SERVICES
(t) +61 (0) 8 9350 1000
(e) service@alliedpumps.com.au

alliedpumps.com.au

V2. Copyright 2016 Allied Pumps Pty Ltd. Allied Pumps reserves the right to modify the information and illustrations contained in this document without prior notice. This is a non-contractual document.